## SPECIFICATIONS

| | | |
|---|---|---|
| Type | | Air-Cooled 4Stroke,OHV Gasoline Engine with Slant Cylinder |
| Number of Cylinder -Bore X stroke | (mm) | 1-80 X 59 |
| Displacement | (cm³) | 296 |
| Continuous Rated Output | kw/rpm (PS/rpm) | 5.5/3600 (7.5/3600) |
| Maximum Output | kw (PS) | 7.3 (10.0) |
| Maximum Torque | N.m/rpm (kgf·m/rpm) | 19.3/2800 (1.97/2800) |
| PTO Shaft Rotation | facing PTO | Counter-Clockwise |
| Fuel | | Unleaded Automobile Gasoline |
| Fuel Tank Capacity | (L) | 6.0 |
| Lubricating Oil | | Engine Oil SE Class or Higher |
| Lubricating Oil Capacity | (L) | 1.0 |
| Carburetor | | Float , Butterfly valve · Sideways suction Type |
| Ignition system | | Breaker less Ignition Type, Flywheel Magneto |
| Spark Plug | | NGK-BPR6HS equivalent(E6RTC) |
| Starting System | | Recoil Starter |
| Governor System | | All Speed Mechanical Governor |
| Lubricating System | | Compulsive Splash Type |
| Air Cleaner | | Polyurethane Type |

NOTE
DIMENSIONS SHOWNWITHOUT ALLOWANCE
ARE NOMINAL AND ARE SUBJECT TO PRODUCTION TOLERANCE.

DIAGRAM

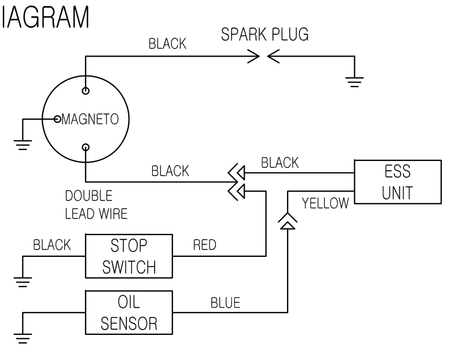


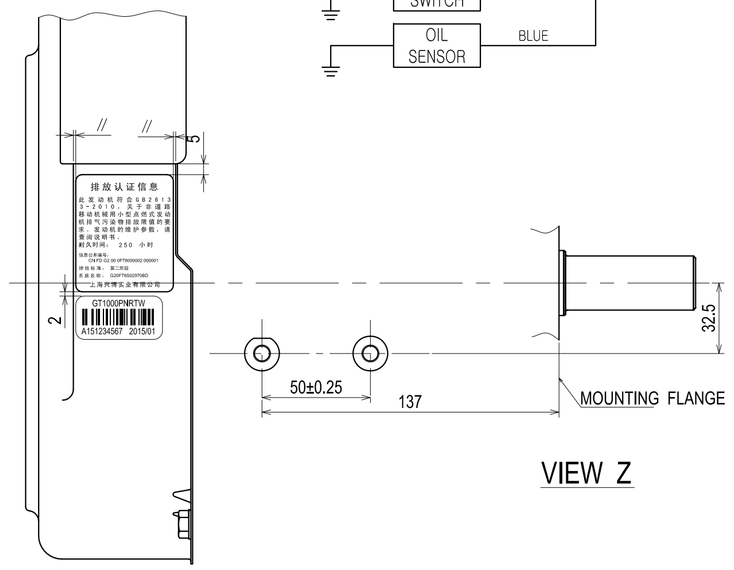


VIEW Z

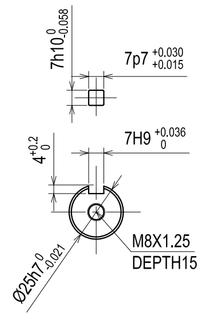


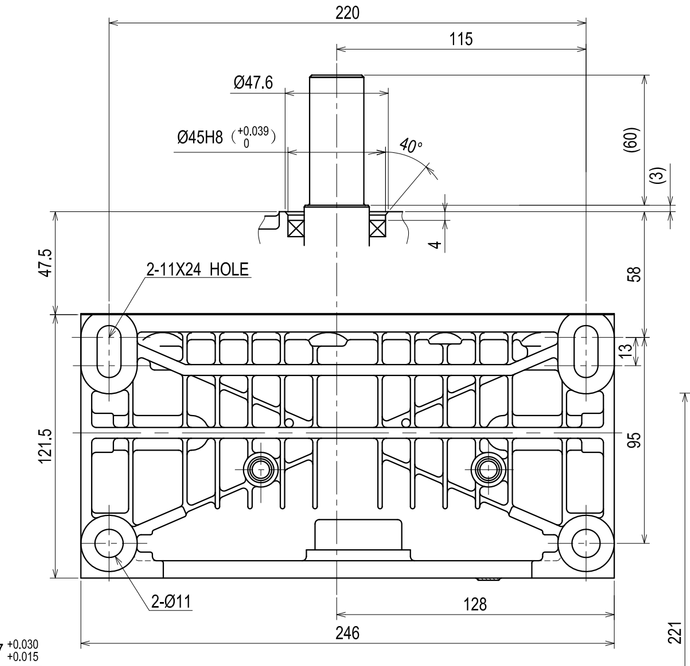


VIEW P

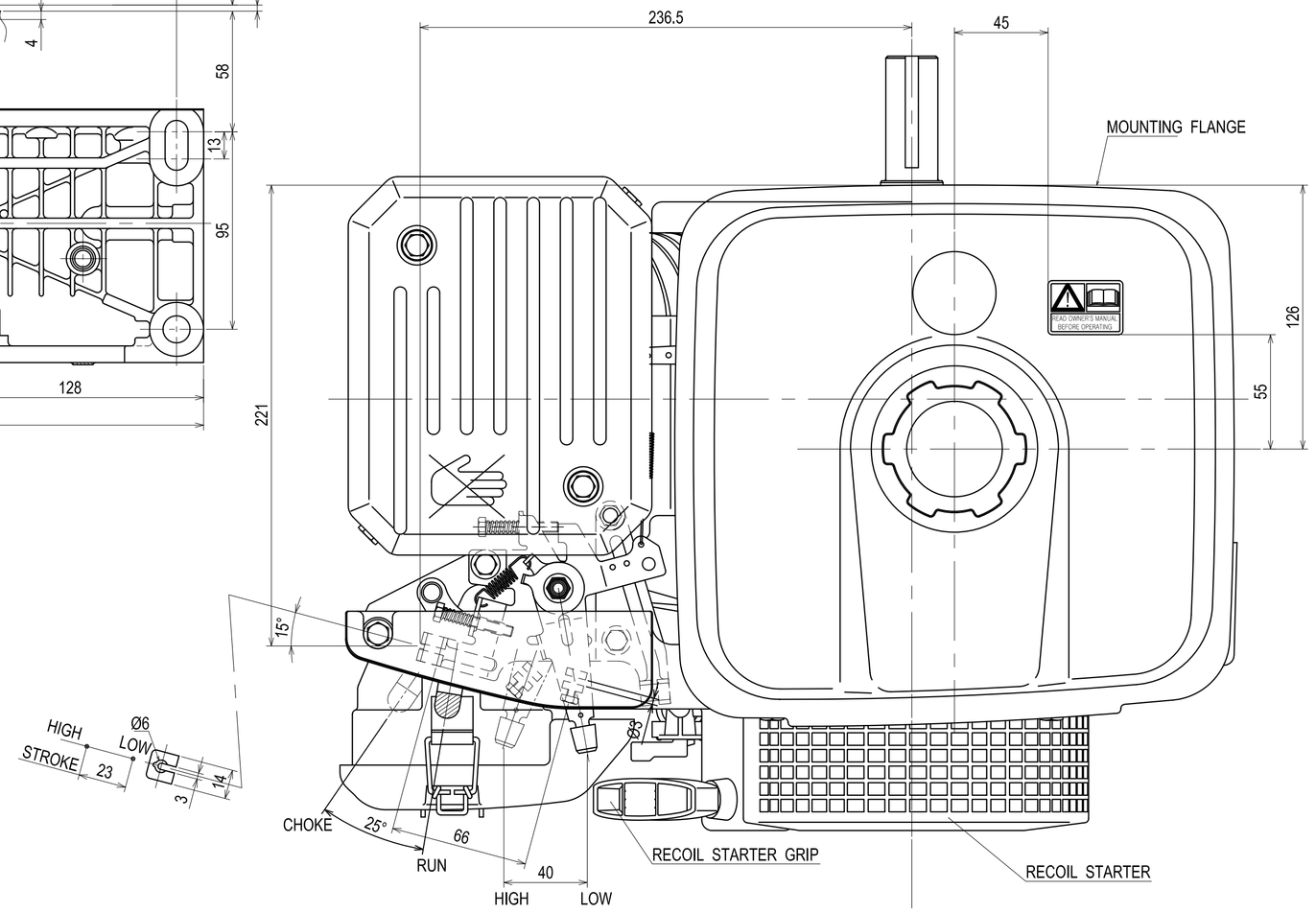


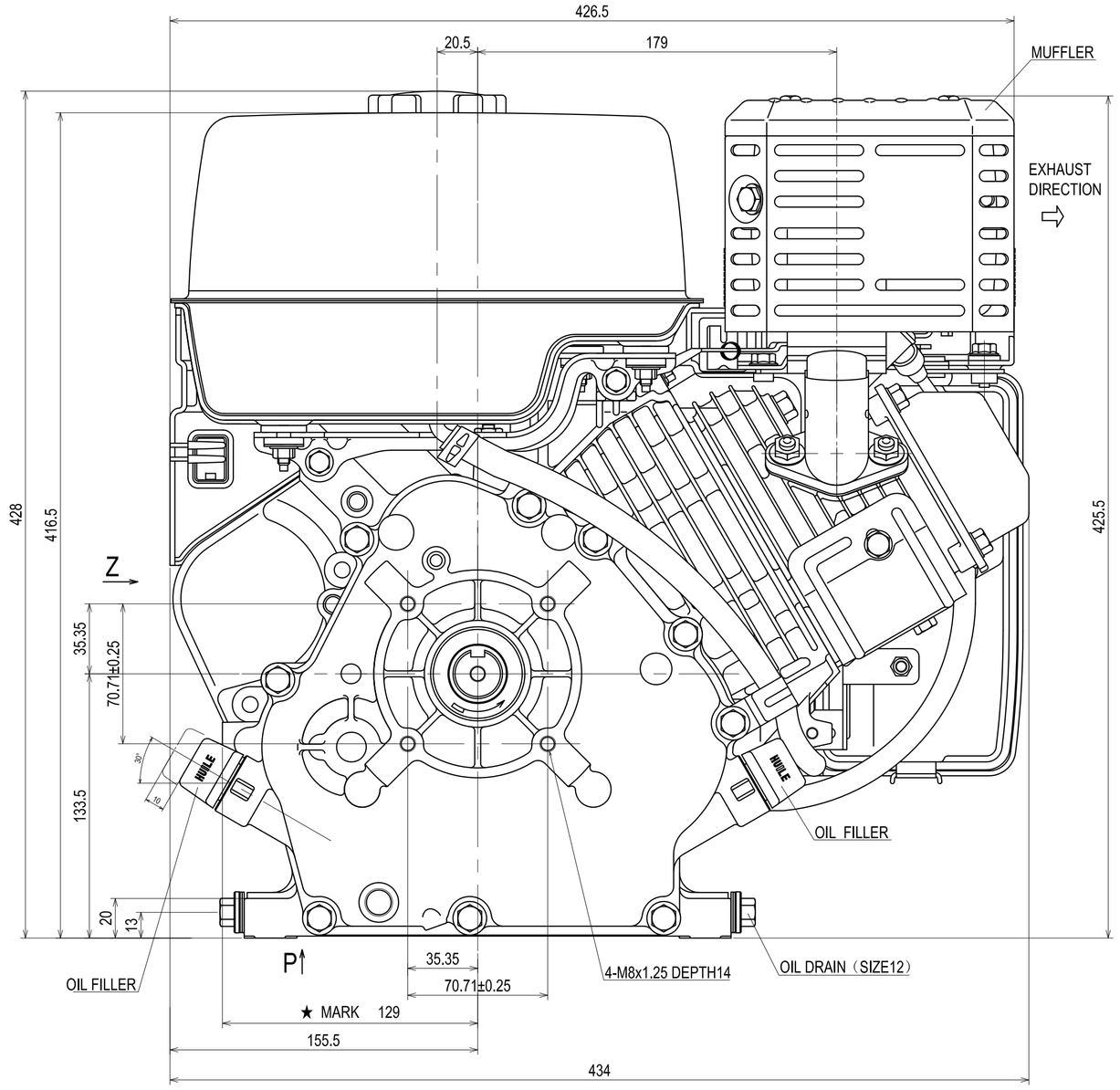


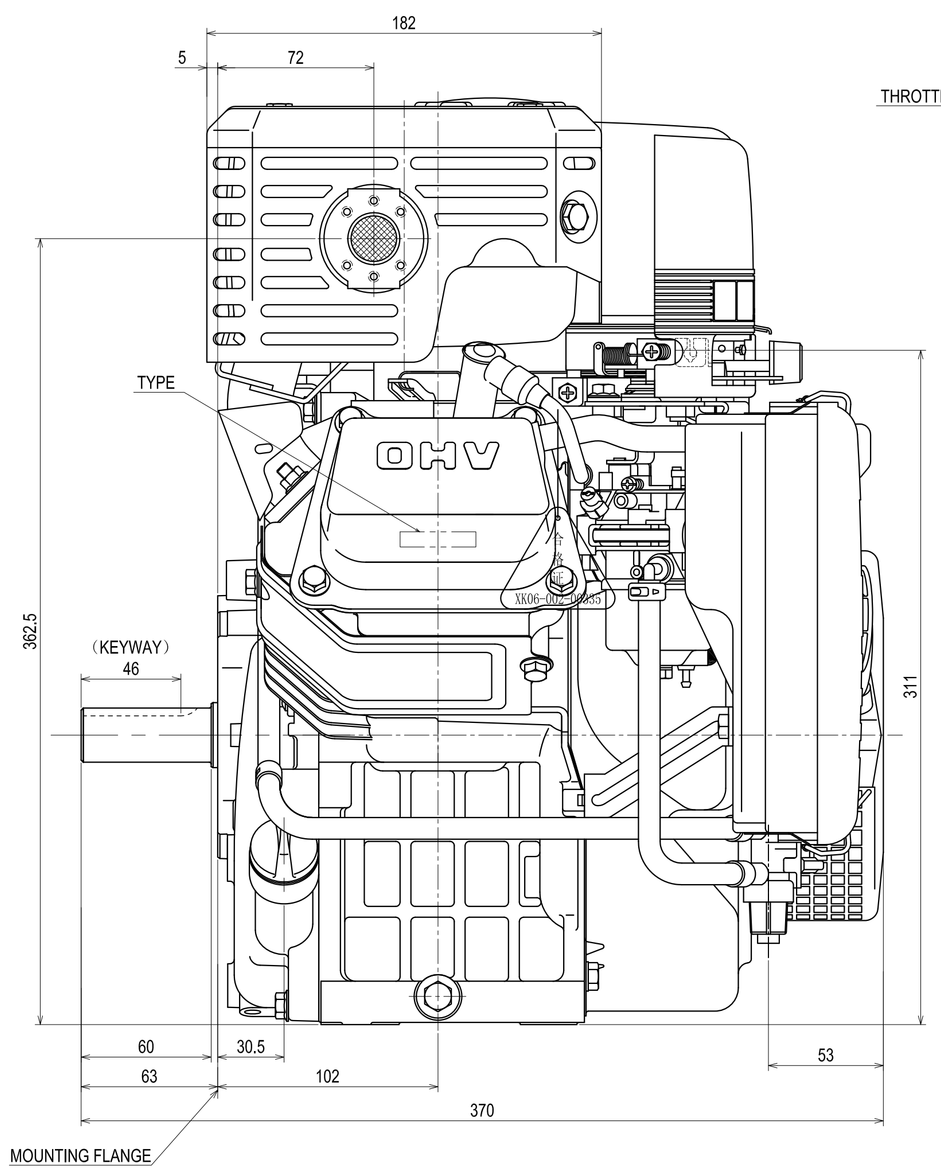


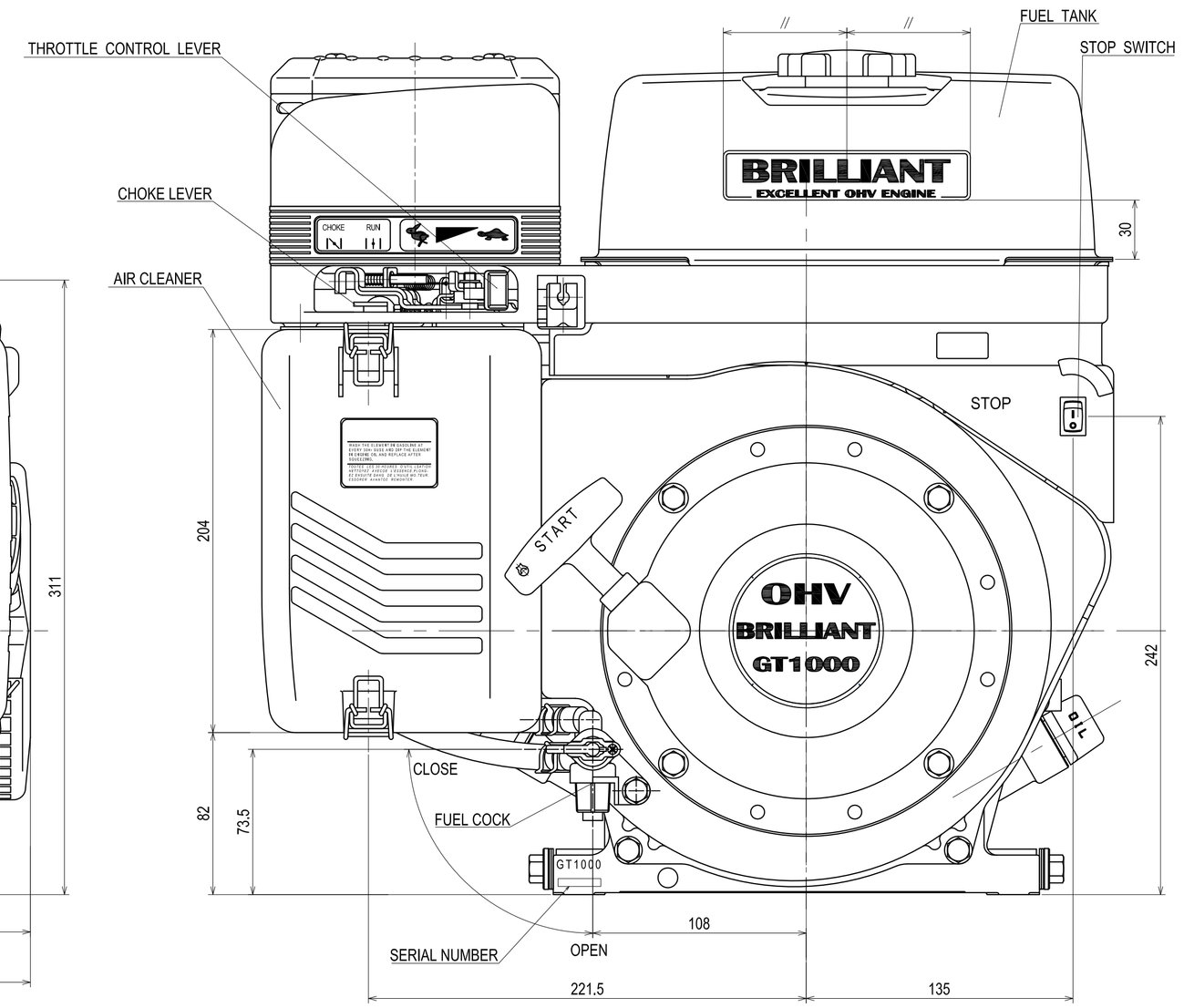


| | | | |
|---|---|---|---|
| | | 认可 | 检图 | 制图 |
| 形式 GT1000 | | 比例 1:2 | B/M | |
| 名称 ENGINE INSTALLATION | | 机型 GT1000PN-RTWZ | | |

博联集团 上海兴博实业有限公司

A1