SPECIFICATIONS

Type		Air-Cooled 4Stroke,OHV Gasoline Engine with Slant Cylinder
Number of Cylinder -Bore X stroke	(mm)	1-89 X 63
Displacement	(cm³)	391
Continuous Rated Output	kw/rpm (PS/rpm)	6.6/3600 (9.0/3600)
Maximum Output	kw (PS)	9.5 (13.0)
Maximum Torque	N.m/rpm (kgf·m/rpm)	26.5/2800 (2.70/2800)
PTO Shaft Rotation	facing PTO	Counter-Clockwise
Fuel		Unleaded Automobile Gasoline
Fuel Tank Capacity	(L)	6.0
Lubricating Oil		Engine Oil SE Class or Higher
Lubricating Oil Capacity	(L)	1.0
Carburetor		Float , Butterfly valve · Sideways suction Type
Ignition system		Breaker less Ignition Type, Flywheel Magneto
Spark Plug		NGK-BPR6HS equivalent(E6RTC)
Starting System		Recoil Starter
Governor System		All Speed Mechanical Governor
Lubricating System		Compulsive Splash Type
Air Cleaner		Polyurethane Type

NOTE
DIMENSIONS SHOWNWITHOUT ALLOWANCE
ARE NOMINAL AND ARE SUBJECT TO PRODUCTION TOLERANCE.

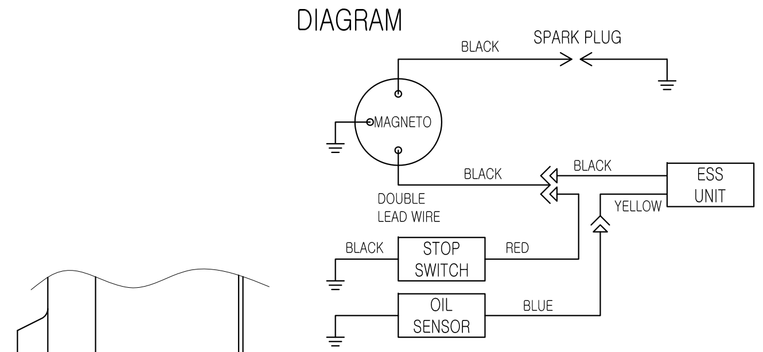

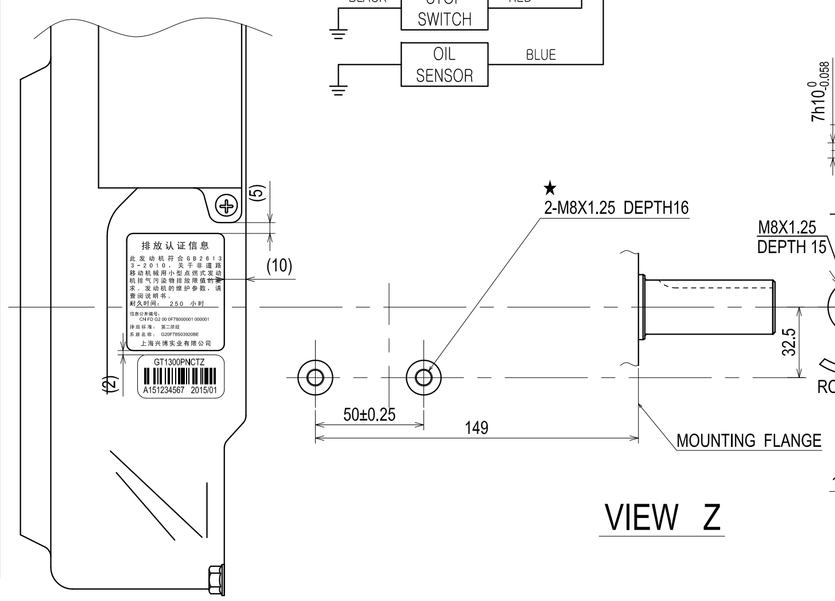

VIEW Z

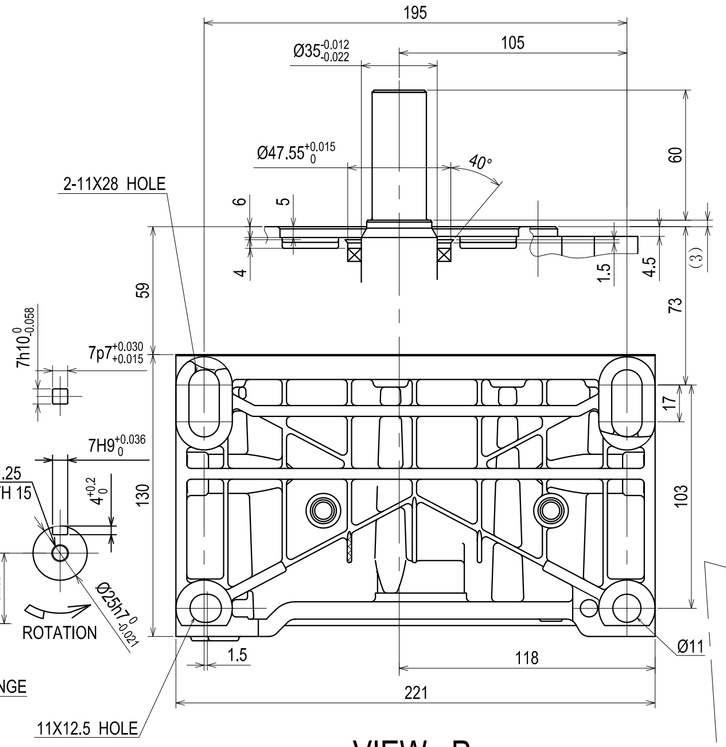

VIEW P

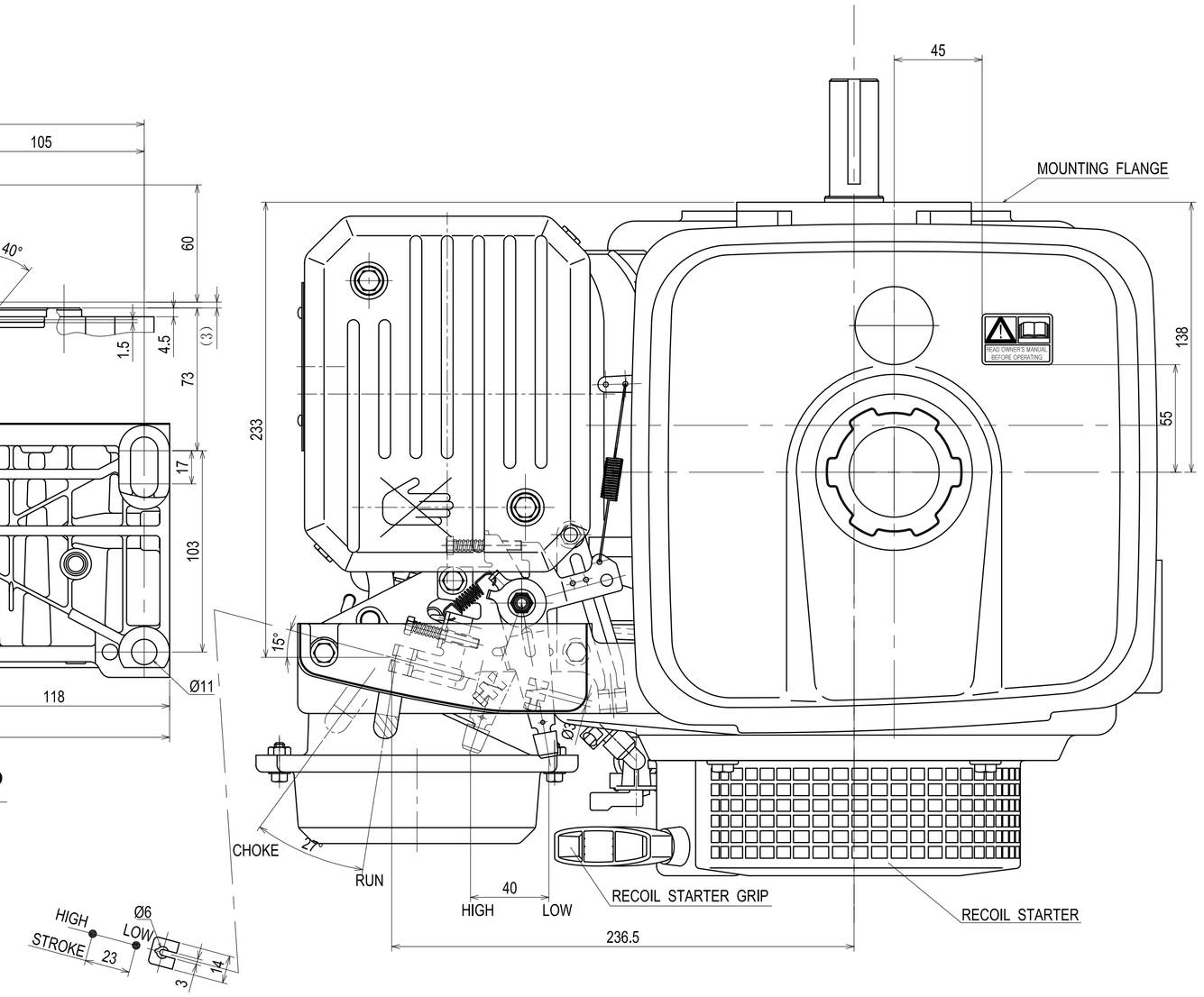

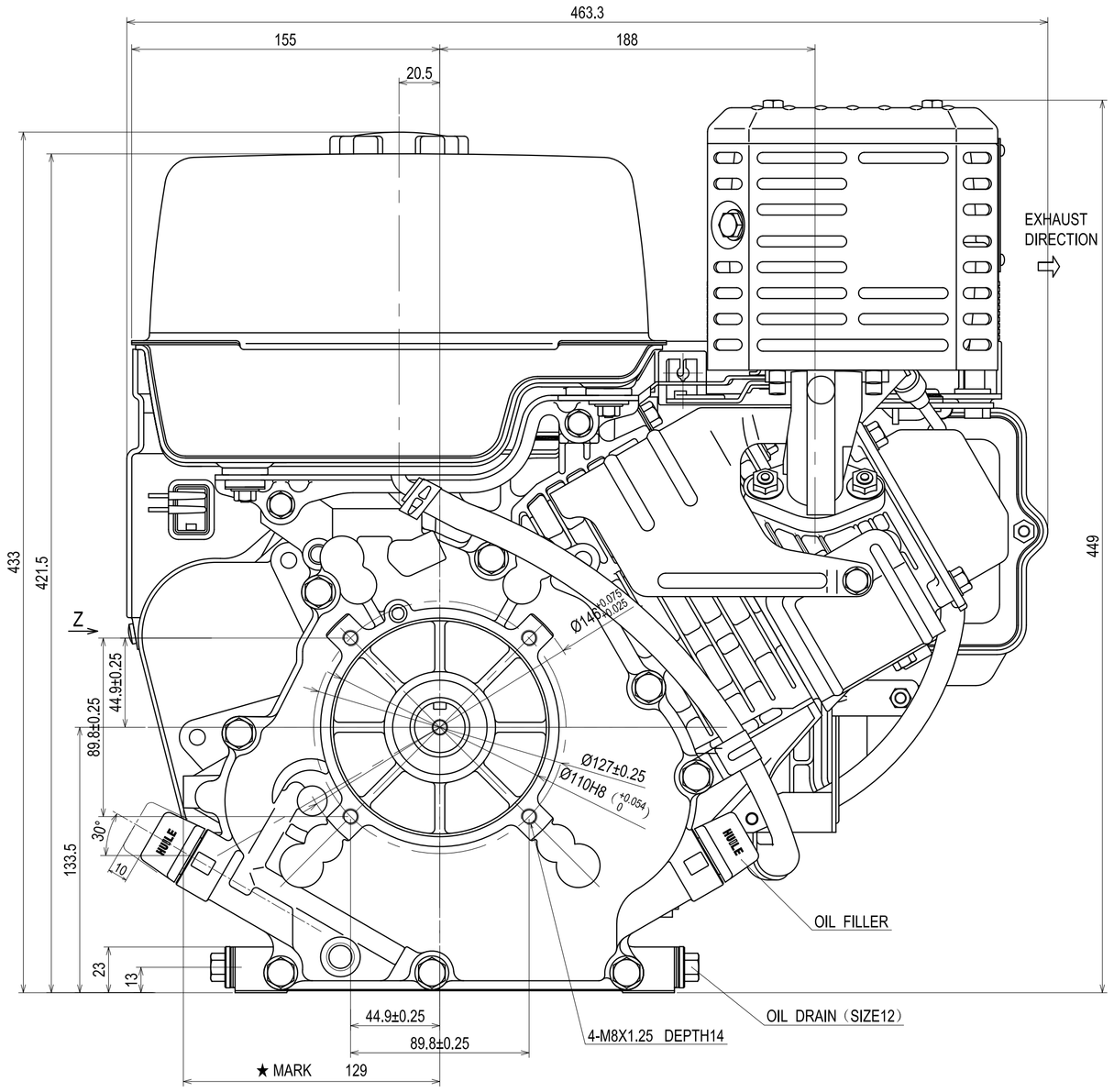

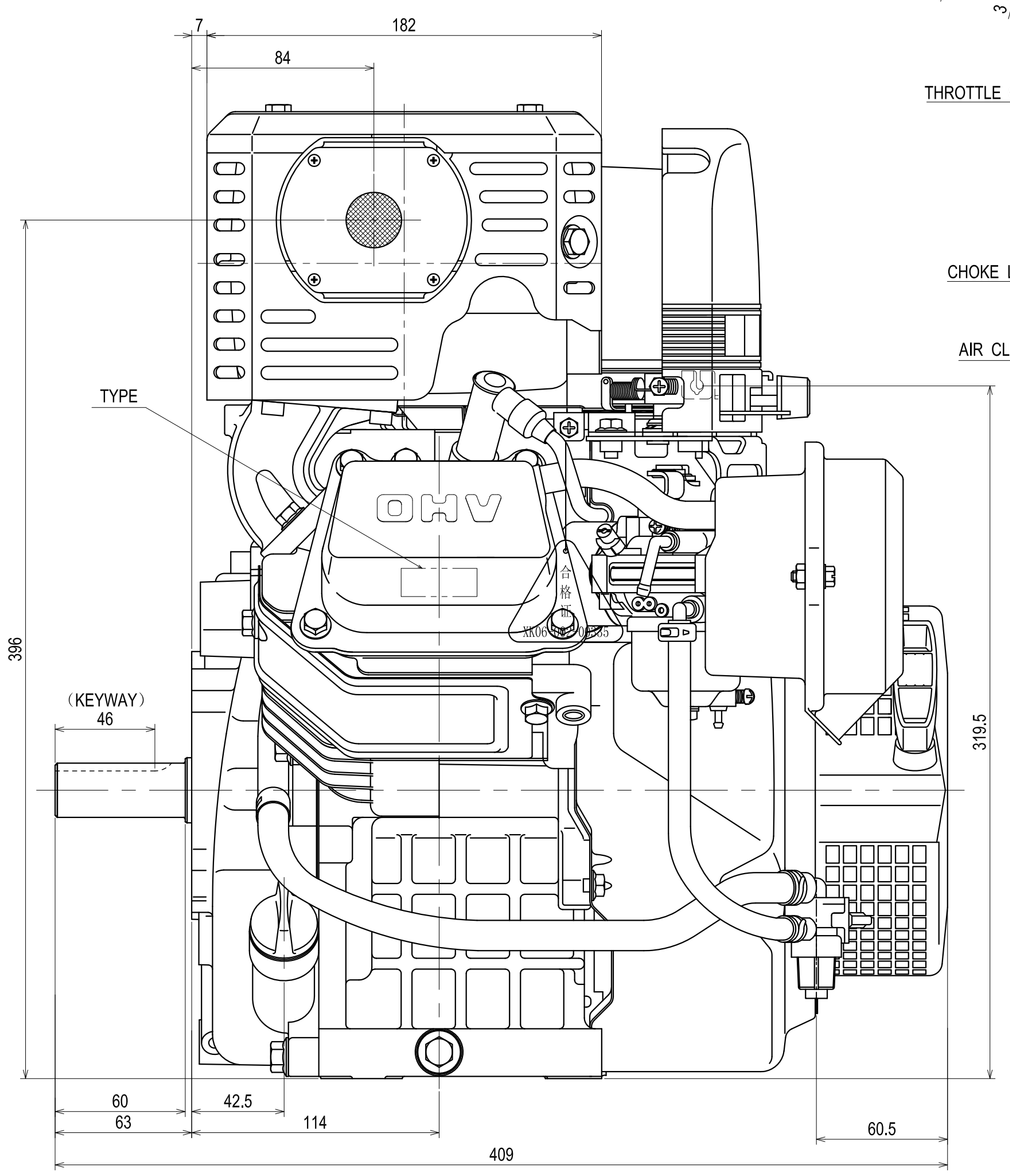

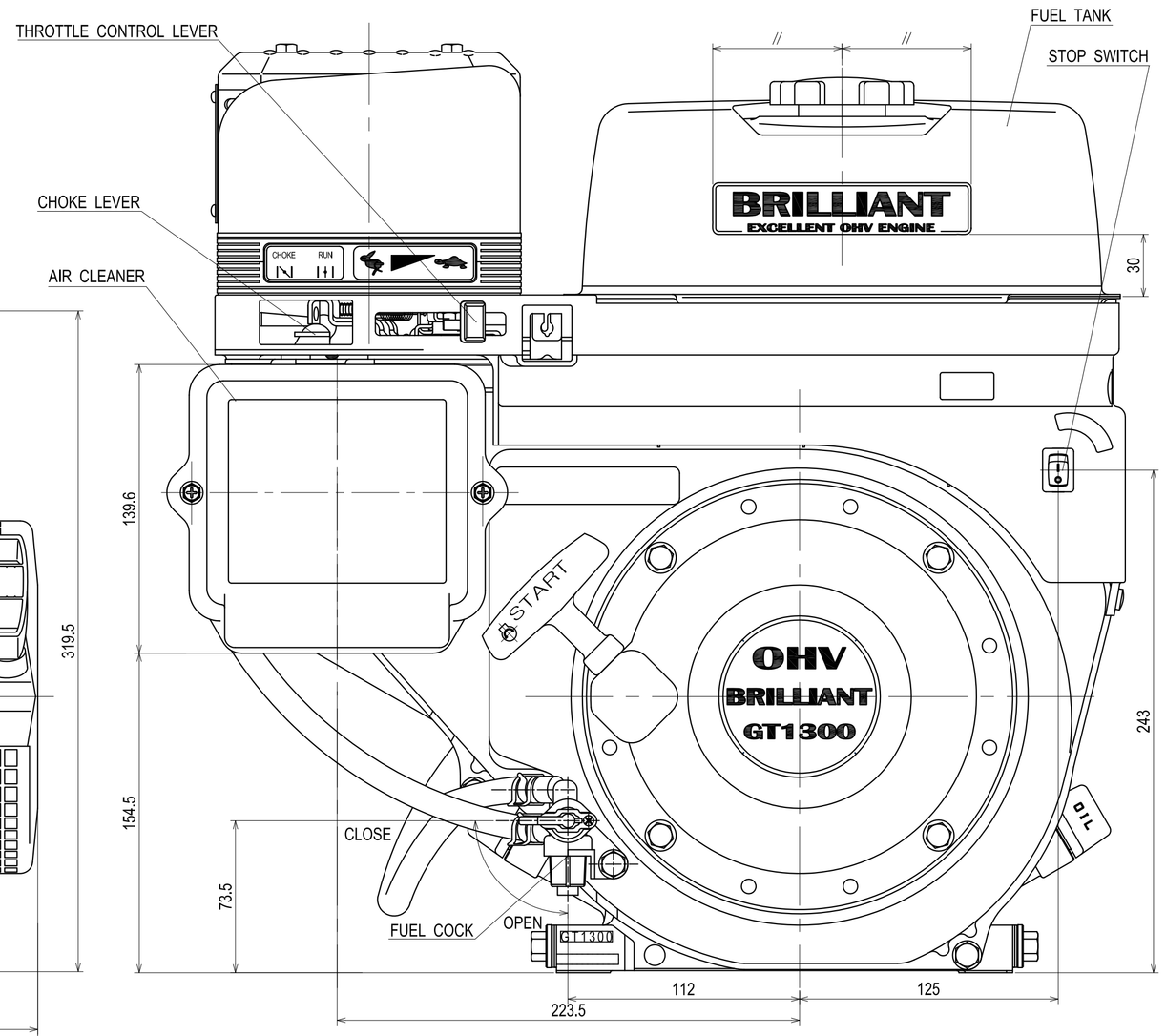

形式		比例 1:2	B/M
名称	ENGINE INSTALLATION	机型	GT1300PN-CTZA

认可 | 检图 | 制图

博联集团 上海兴博实业有限公司

A1

销件 | 样业 | 片证 | 设计 | 实验 | 设计 | 制造 | 行政