SPECIFICATIONS

Type		Air-Cooled 4Stroke,OHV Gasoline Engine with Slant Cylinder	
Number of Cylinder -Bore X stroke	(mm)	1-68 X 50	
Displacement	(cm³)	182	
Continuous Rated Output	kw/rpm (PS/rpm)	3.3/3600 (4.5/3600)	※
Maximum Output	kw (PS)	4.4 (6.0)	※
Maximum Torque	N.m/rpm (kgf·m/rpm)	11.6/2800 (1.18/2800)	※
PTO Shaft Rotation	facing PTO	Counter-Clockwise	
Fuel		Unleaded Automobile Gasoline	
Fuel Tank Capacity	(L)	3.8	
Lubricating Oil		Engine Oil SE Class or Higher	
Lubricating Oil Capacity	(L)	0.6	
Carburetor		Float , Butterfly valve · Sideways suction Type	
Ignition system		Breaker less Ignition Type, Flywheel Magneto	
Spark Plug		NGK-BPR6HS equivalent(E6RTC)	
Starting System		Recoil Starter	
Governor System		All Speed Mechanical Governor	
Lubricating System		Compulsive Splash Type	
Air Cleaner		Polyurethane Type	

(Notes1) ※markshows the valueof a standard equipment state.
(Notes2) Rotation speed is the one at the output shaft.

NOTE
DIMENSIONS SHOWNWITHOUT ALLOWANCE
ARE NOMINAL AND ARE SUBJECT TO PRODUCTION TOLERANCE.

DIAGRAM

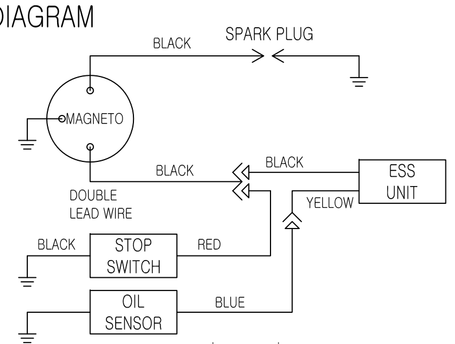

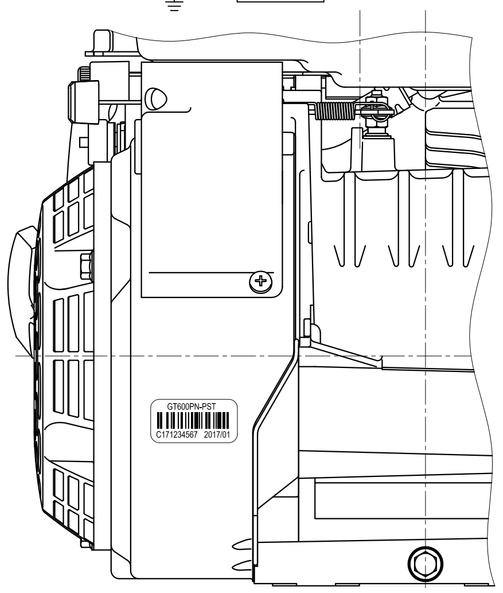

VIEW Q

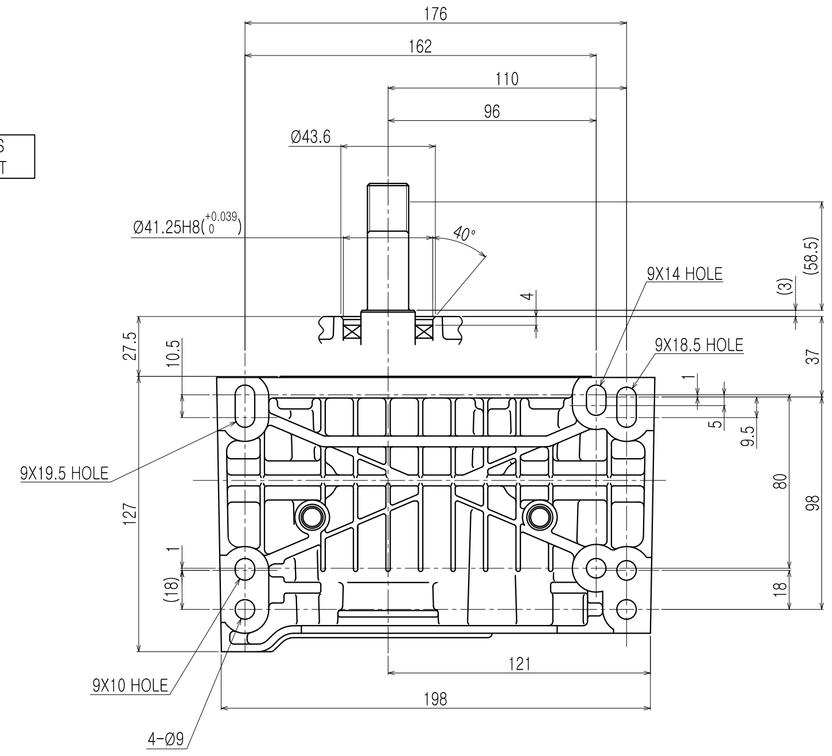

VIEW P

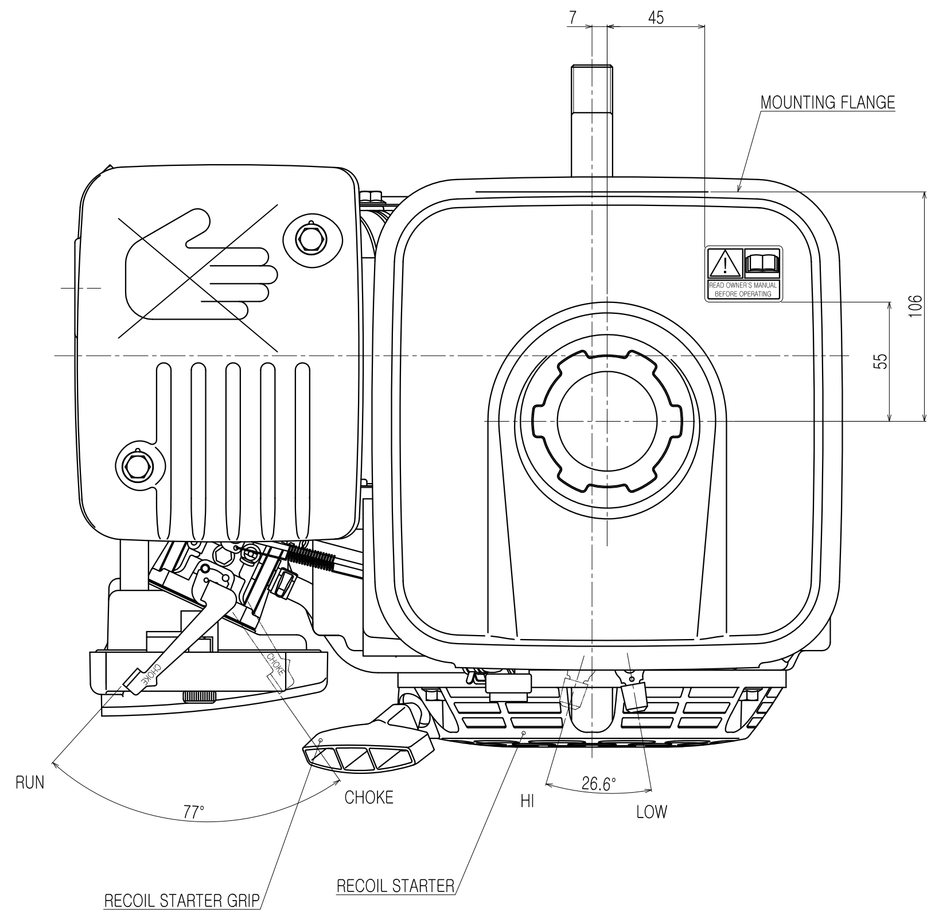

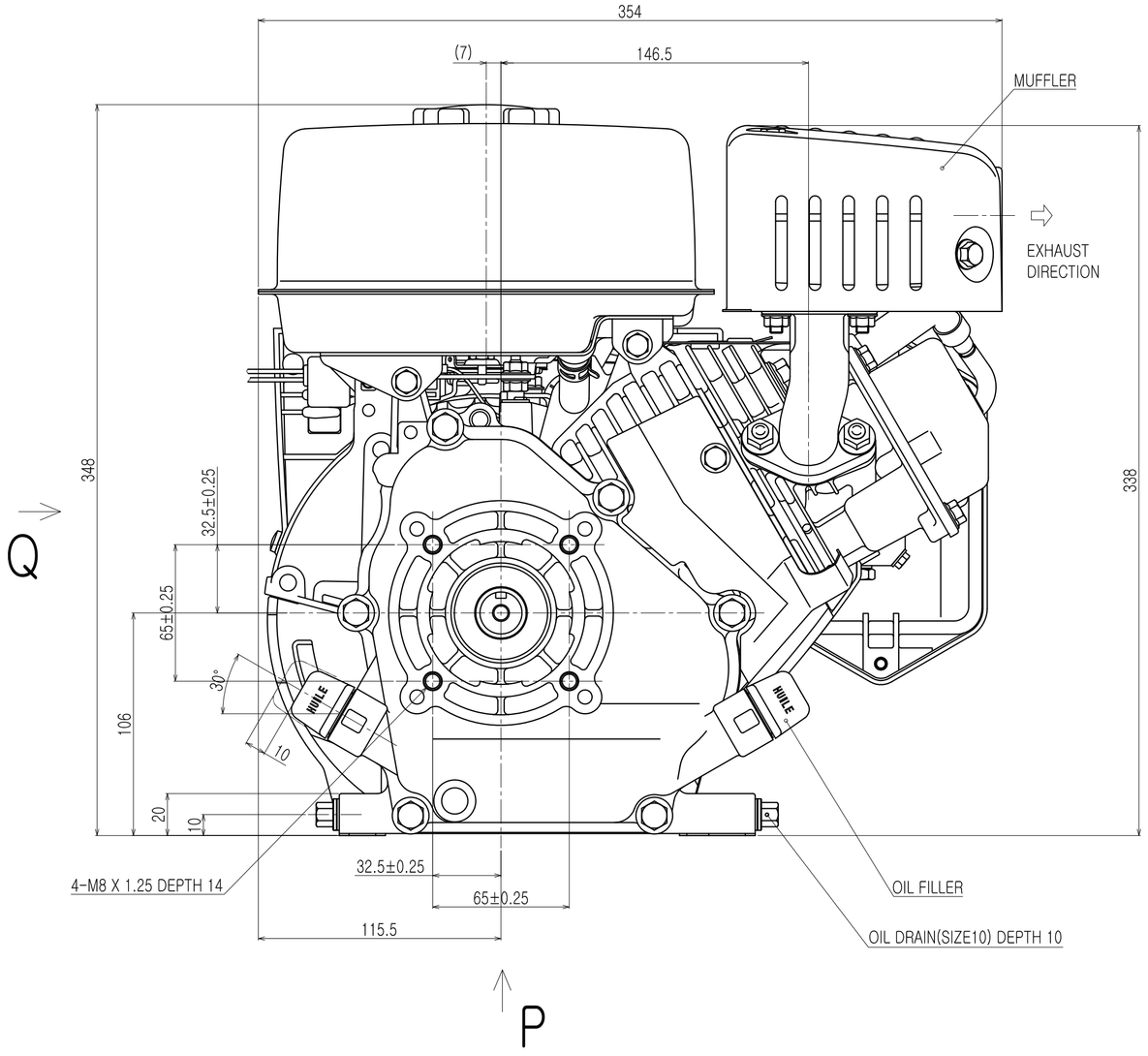

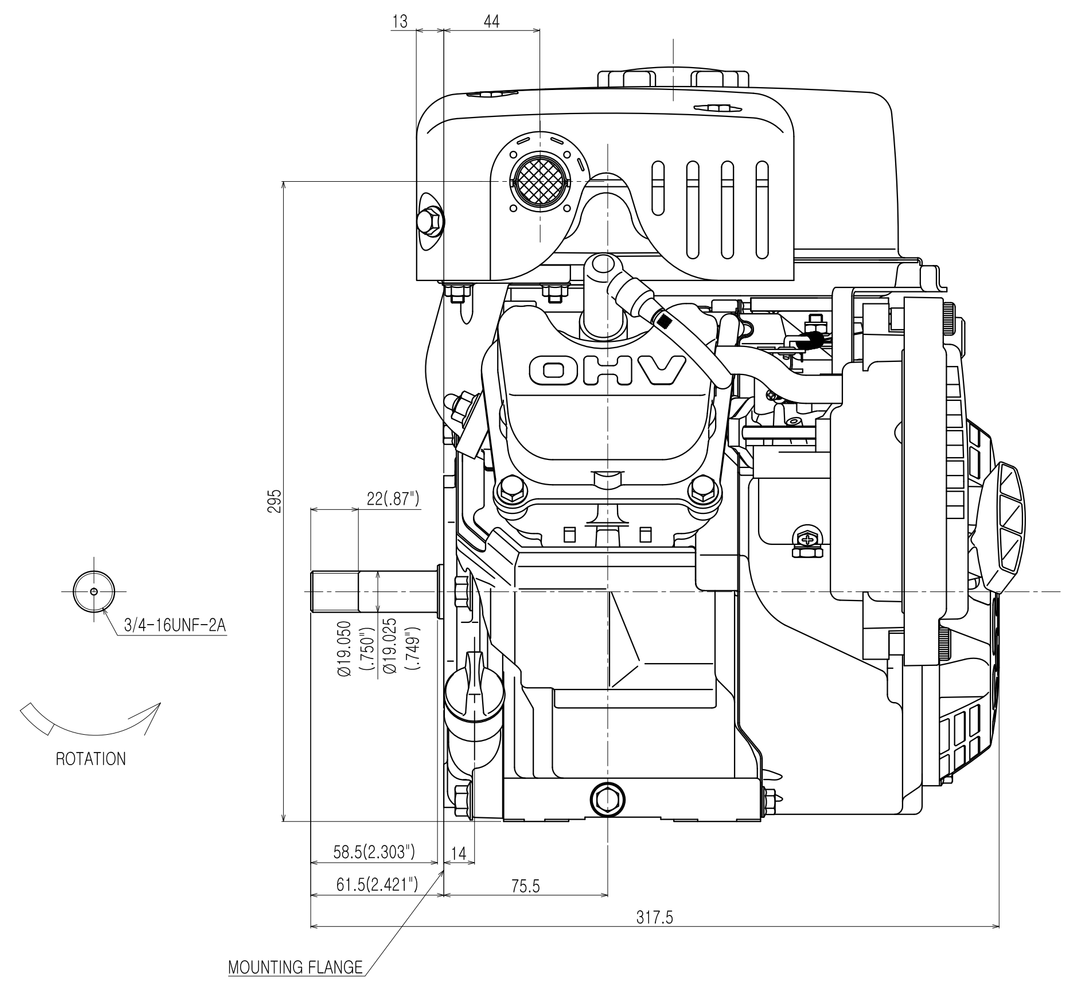

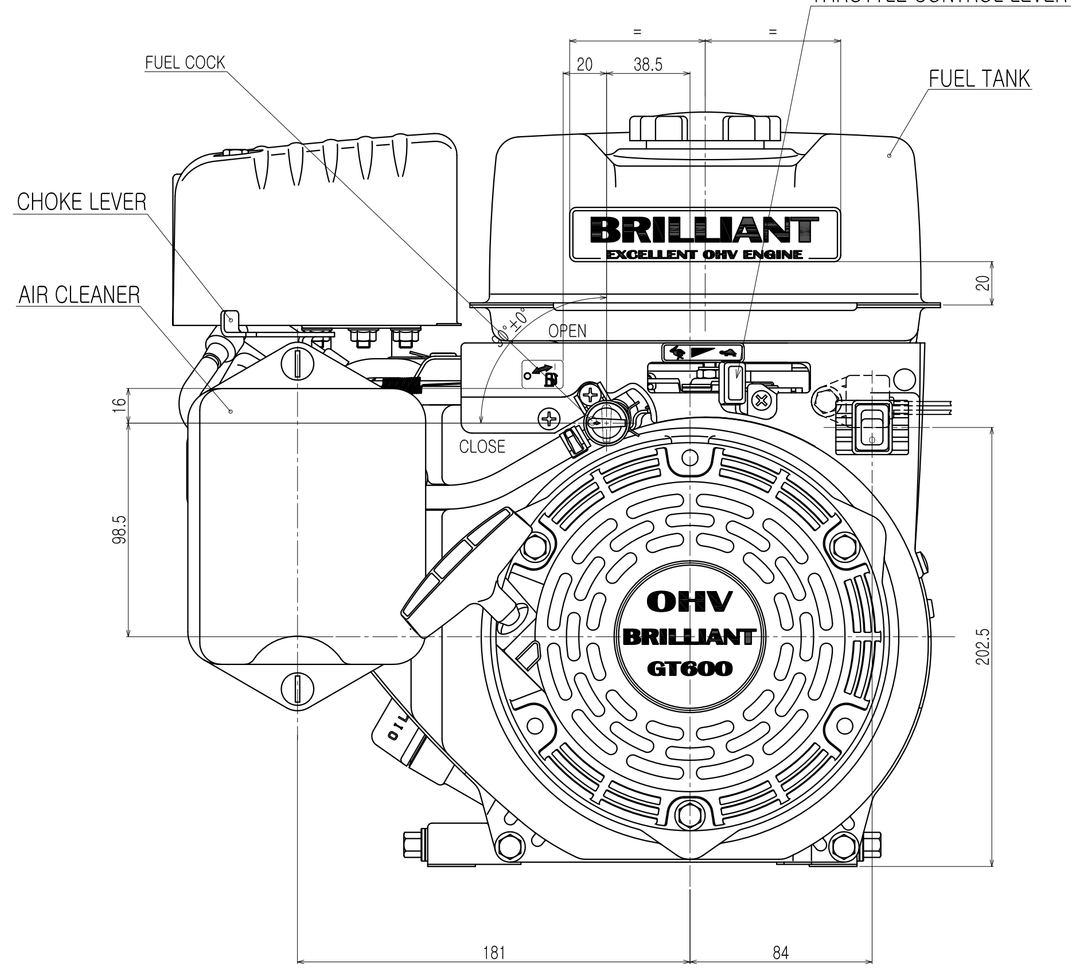

	认可	检图	制图
形式 GT600	比例 1:2	B/M	
名称 ENGINE INSTALLATION	机型 GT600PN-PSTZ		

博联集团 上海兴博实业有限公司

A1